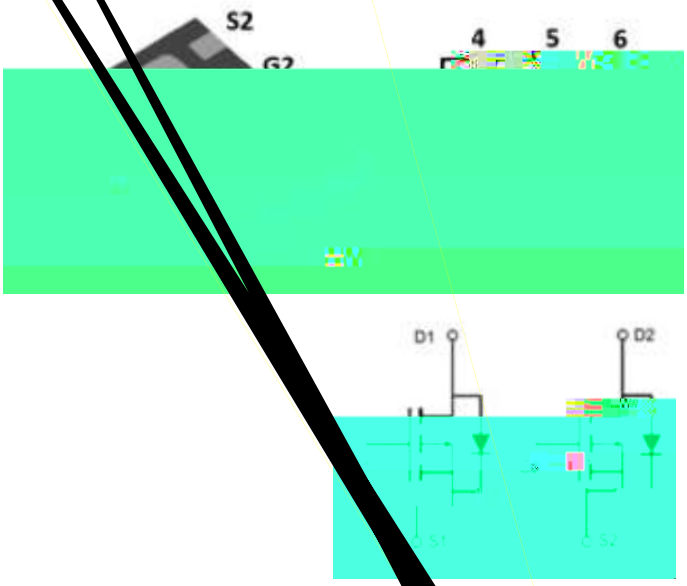
S2
G2
4
5
6
D1
D2
S1
S2

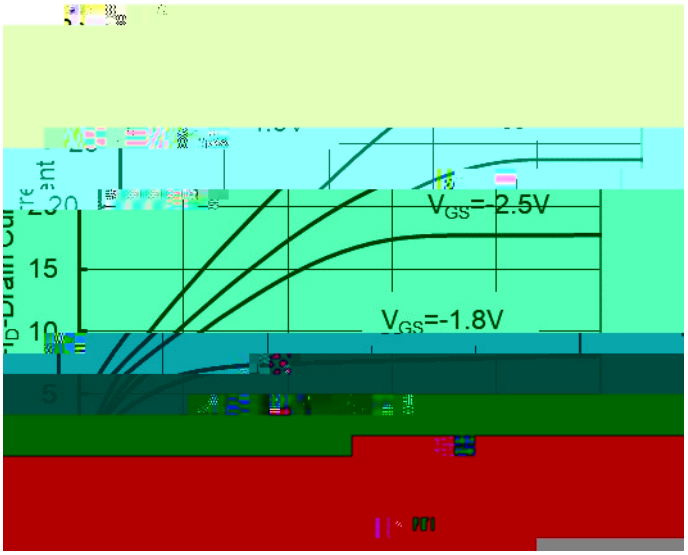
15
10
5
V_{GS}=-2.5V
V_{GS}=-1.8V

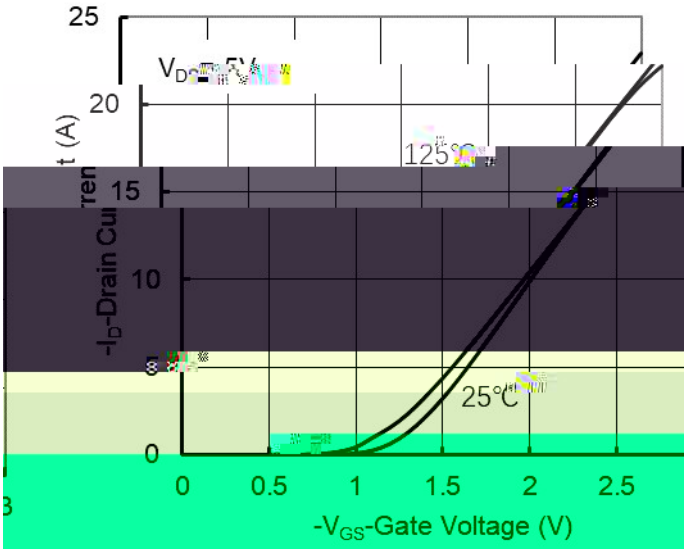
25
20
15
10
5
0
125°C
25°C
-I_D-Drain Current (A)
0
0.5
1
1.5
2
2.5
-V_{GS}-Gate Voltage (V)

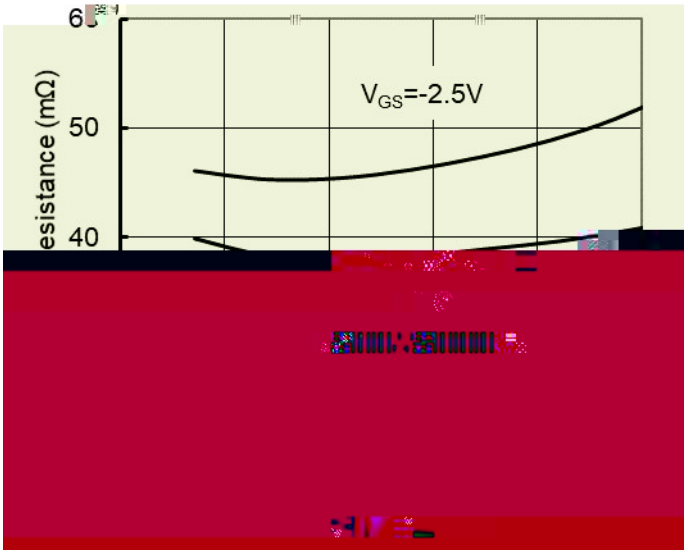
60
50
40
V_{GS}=-2.5V

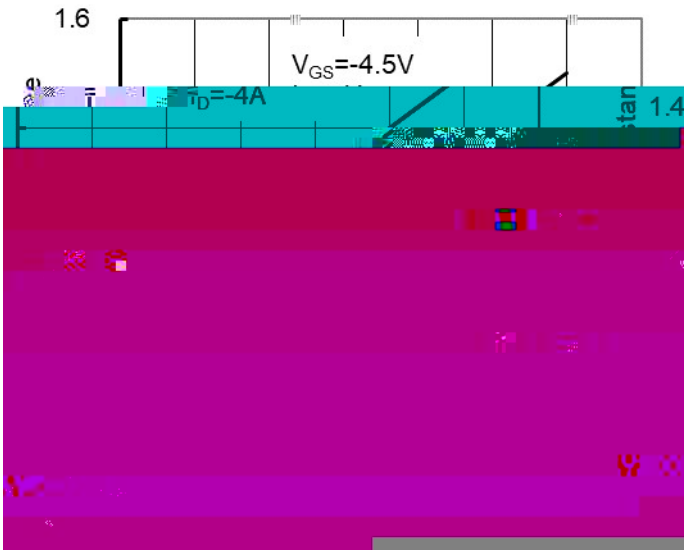
1.6
1.4
V_{GS}=-4.5V
I_D=-4A

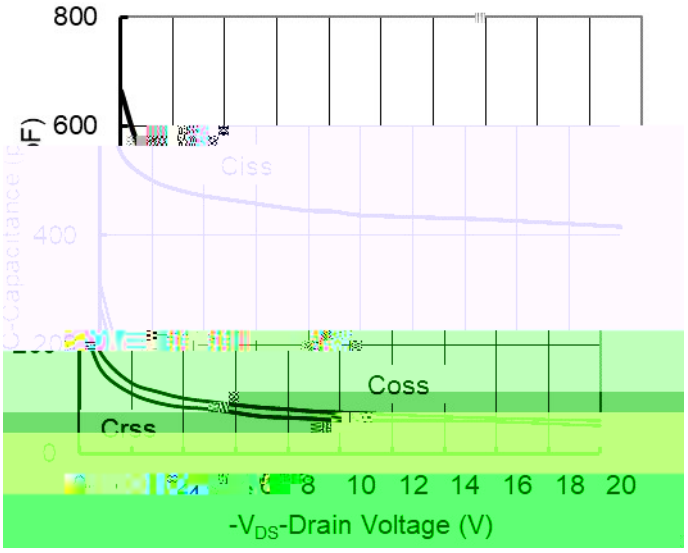
800
600
400
Ciss
Coss
Crss
8
10
12
14
16
18
20
-V_{DS}-Drain Voltage (V)

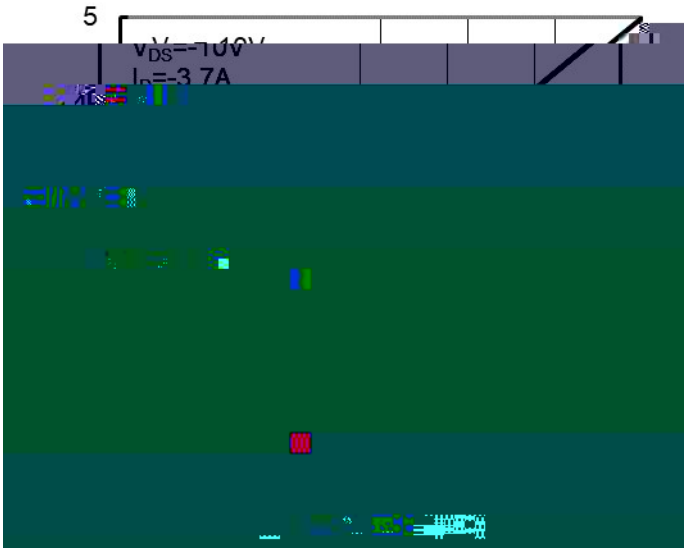
5
I_D=-3.7A

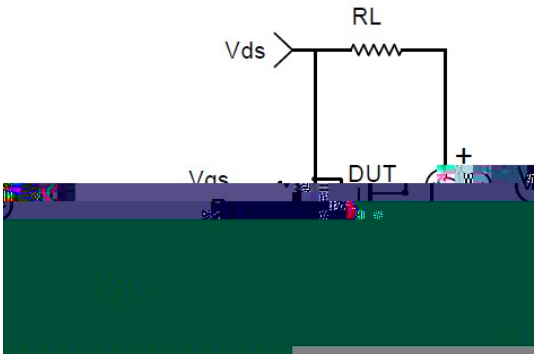
RL
Vds
Vgs
DUT
+

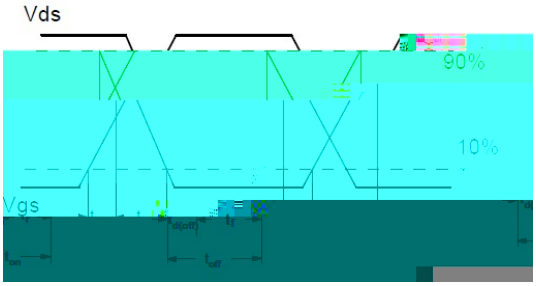
Vds
90%
10%
Vgs

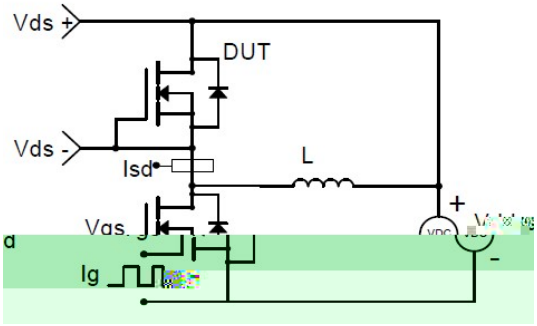
Vds +
DUT
Vds -
Isd
L
Vgs
Ig
+
-

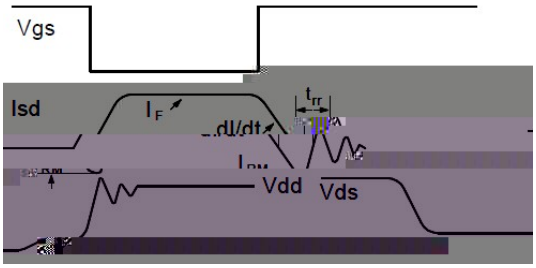
Vgs
Isd
Vdd
Vds

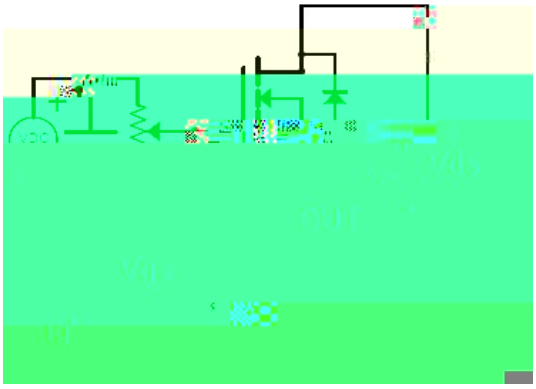

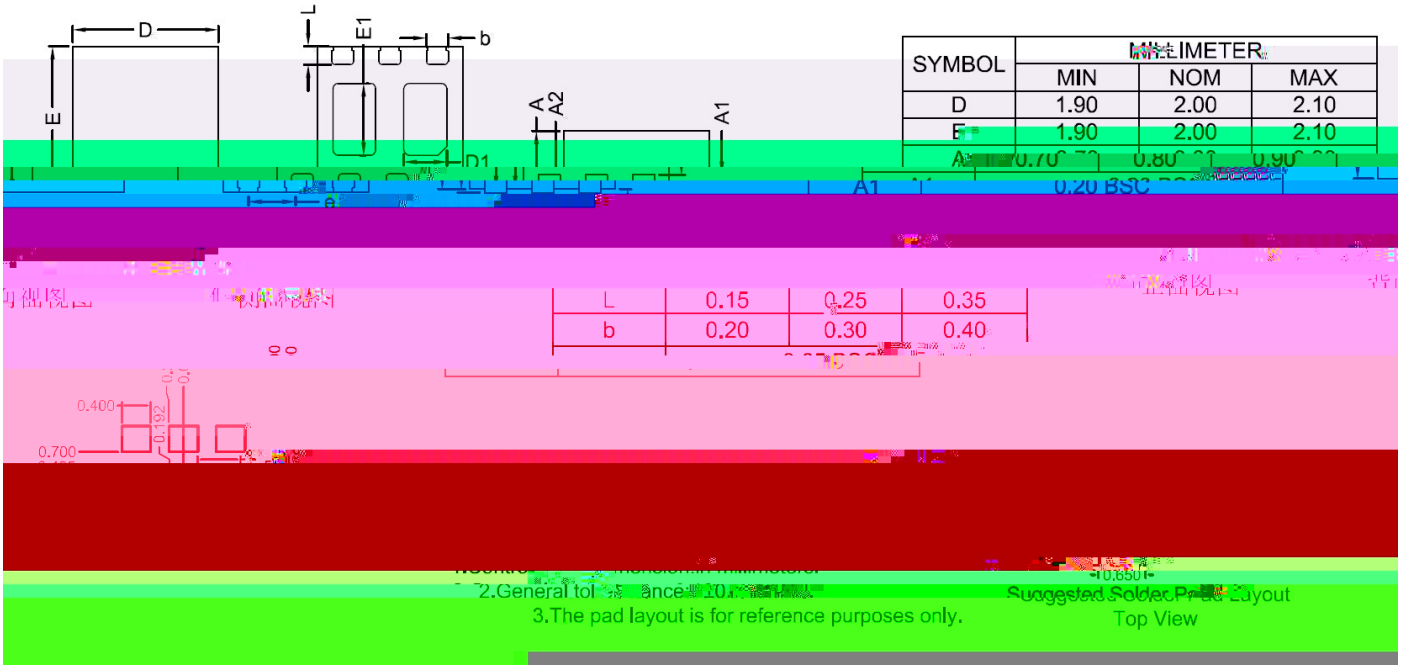

SYMBOL	MILLIMETER		
	MIN	NOM	MAX
D	1.90	2.00	2.10
E	1.90	2.00	2.10
A	0.70	0.80	0.90
L	0.15	0.25	0.35
b	0.20	0.30	0.40

2.General tol ance ±0.
3.The pad layout is for reference purposes only.

Suggested Solder Pad Layout