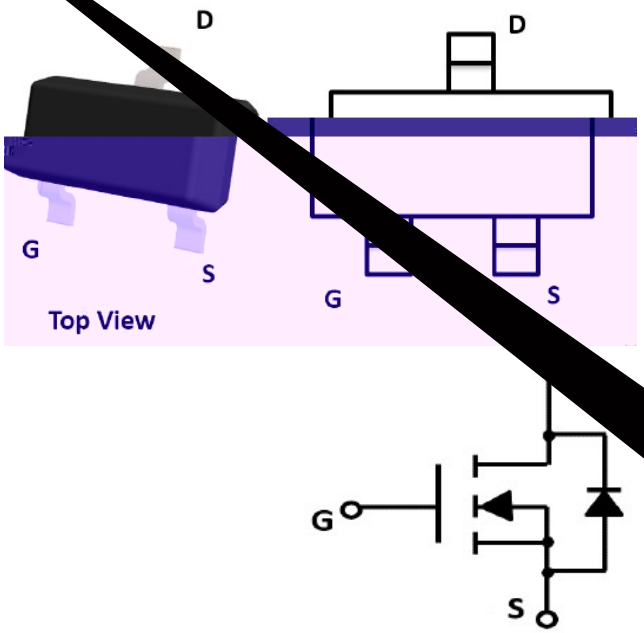
D
D
G
S
G
S
Top View
G
S

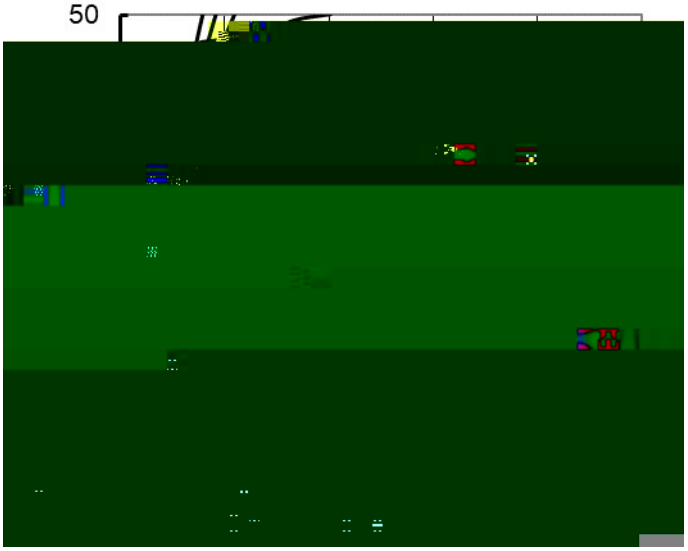
50

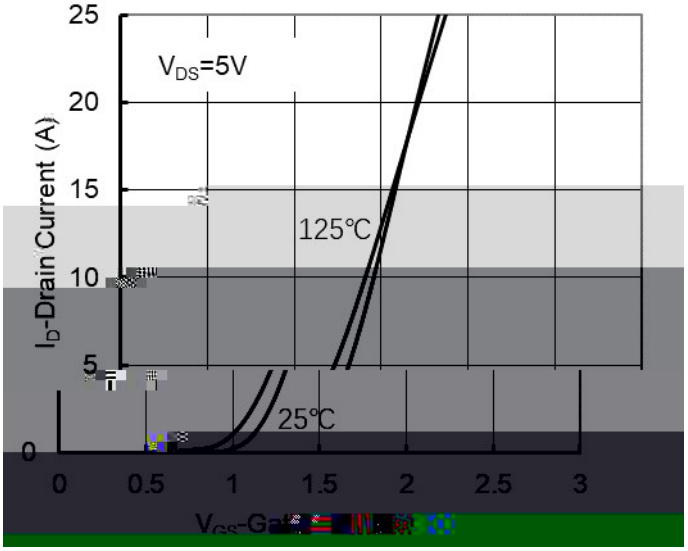
25
20
15
10
5
0
V_{DS}=5V
125℃
25℃
I_D-Drain Current (A)
0
0.5
1
1.5
2
2.5
3

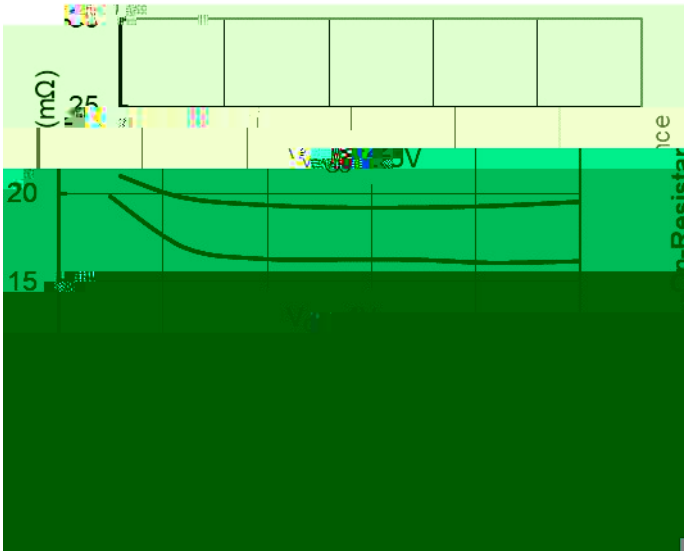
(mΩ)
20
15

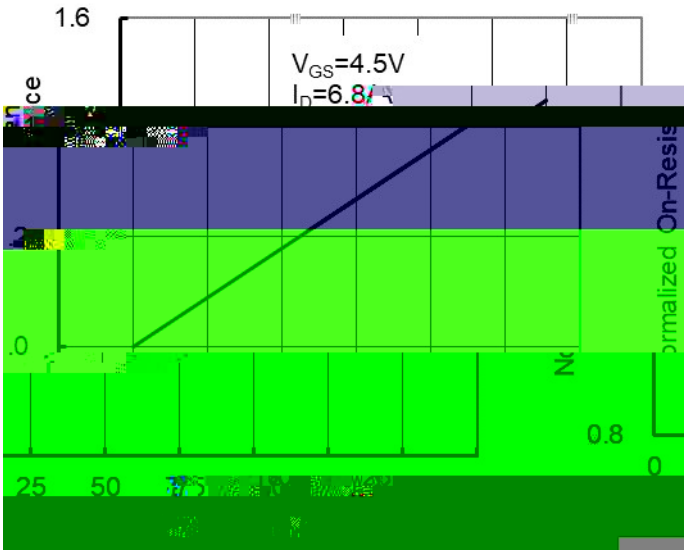
1.6
V_{GS}=4.5V
0.8
0
25
50

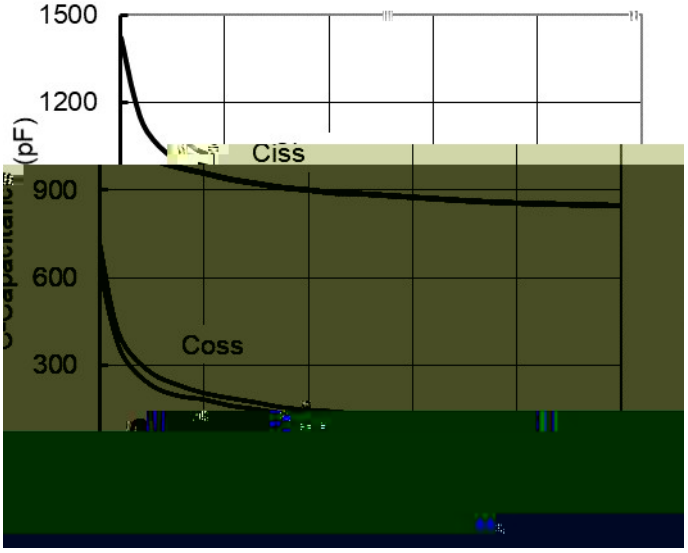
1500
1200
900
600
300
(pF)
Ciss
Coss

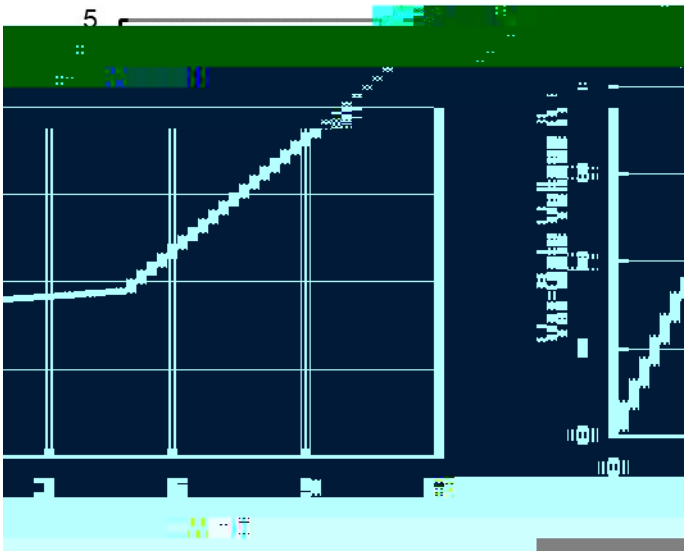
5

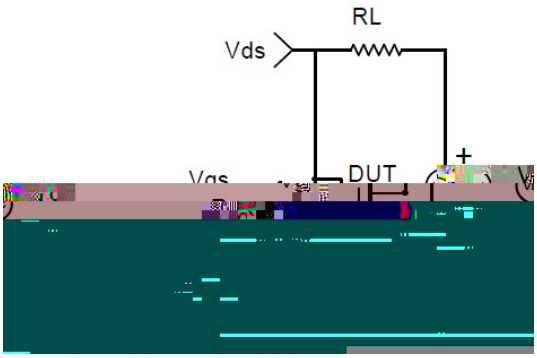
RL
Vds
Vgs
DUT
+

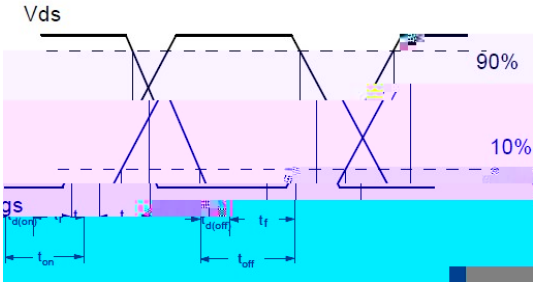
Vds
90%
10%
gs
d(on)
d(off)
t_f
t_on
t_off

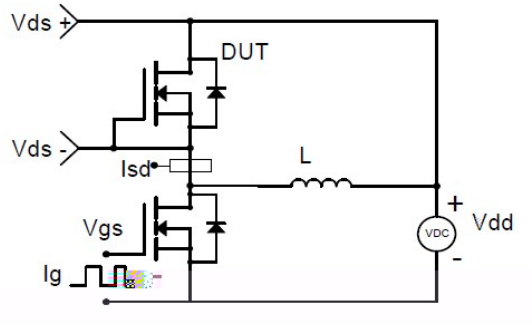
Vds +
DUT
Vds -
Isd
L
Vgs
Ig
+
Vdd
VDC
-

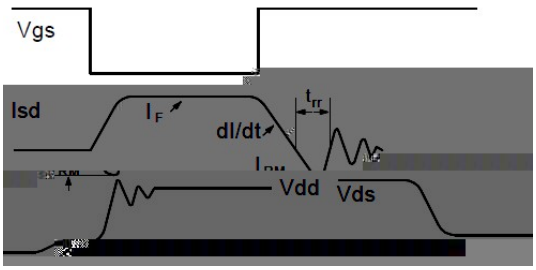
Vgs
Isd
I_F
t_rr
dI/dt
Vdd
Vds

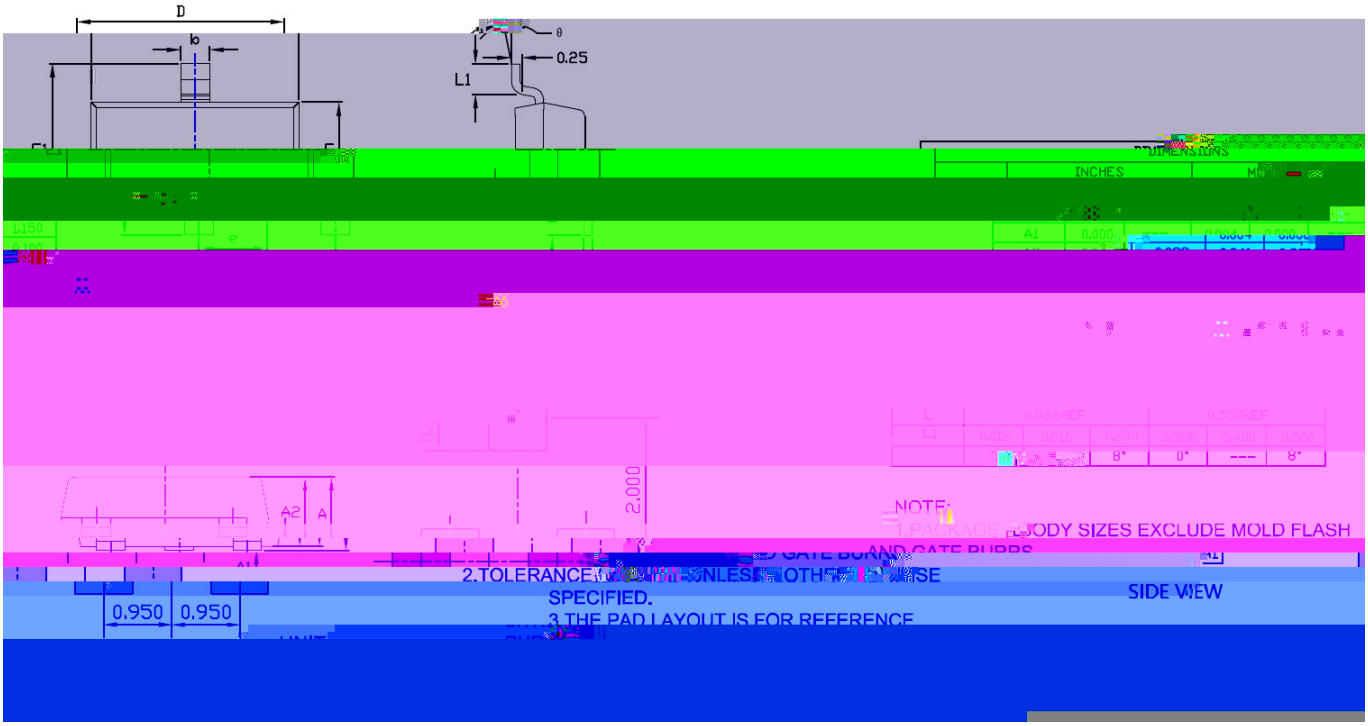
D
b
θ
0.25
L1
DIMENSIONS
INCHES
A1
0.000
L
0.022REF
0.550REF
L1
0.012
0.016
0.200
0.300
0.400
0.500
8°
0°

8°
A2
A
2.000
NOTE:
1.PACKAGE BODY SIZES EXCLUDE MOLD FLASH
AND GATE BURRS
2.TOLERANCE
UNLESS OTHERWISE
SPECIFIED.
3.THE PAD LAYOUT IS FOR REFERENCE
SIDE VIEW
0.950
0.950