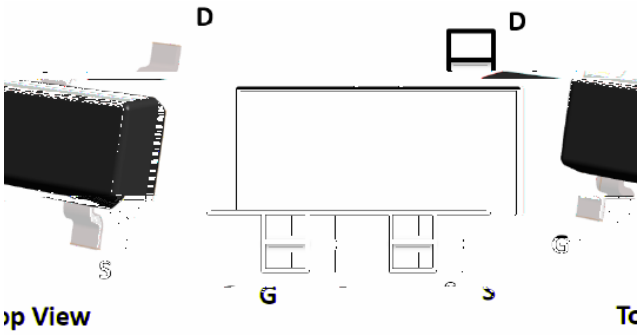
D
D
G
G
S
S
G
p View
To

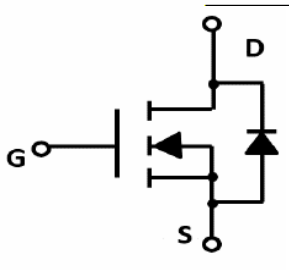
D
G
S

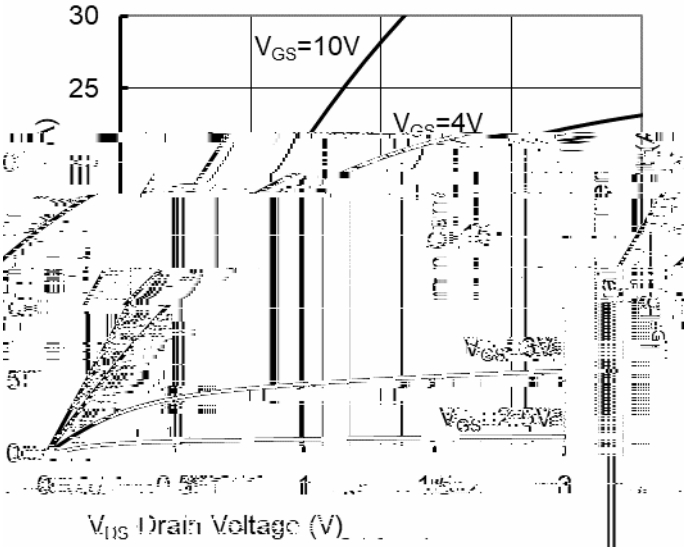
30
25
V_{GS}=10V
V_{GS}=4V
V_{DS} Drain Voltage (V)

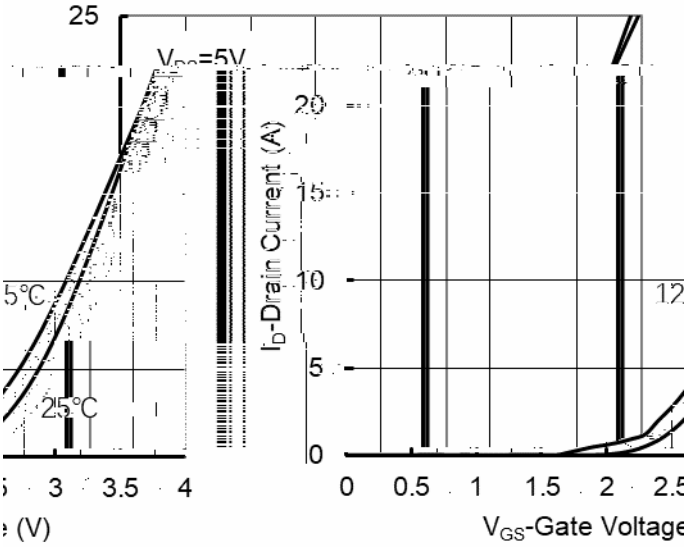
25
V_{DS}=5V
20
15
10
5
0
I_D-Drain Current (A)
25°C
0
0.5
1
1.5
2
V_{GS}-Gate Voltage

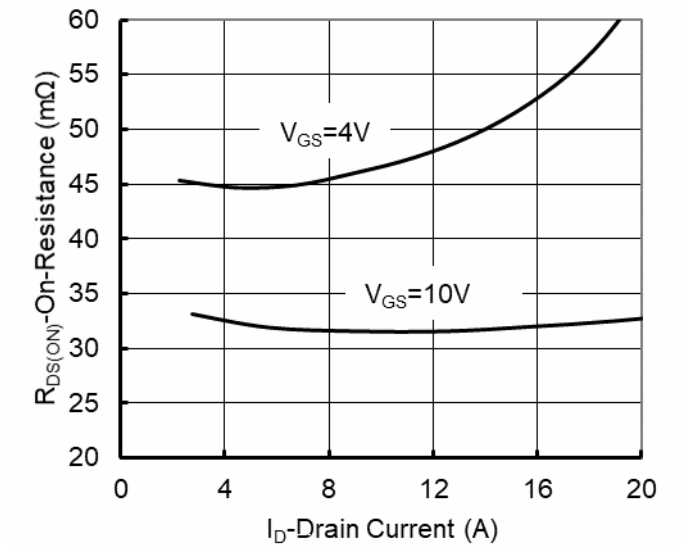
60
55
50
45
40
35
30
25
20
$R_{DS(ON)}$-On-Resistance (mΩ)
V_{GS}=4V
V_{GS}=10V
0
4
8
12
16
20
I_D-Drain Current (A)

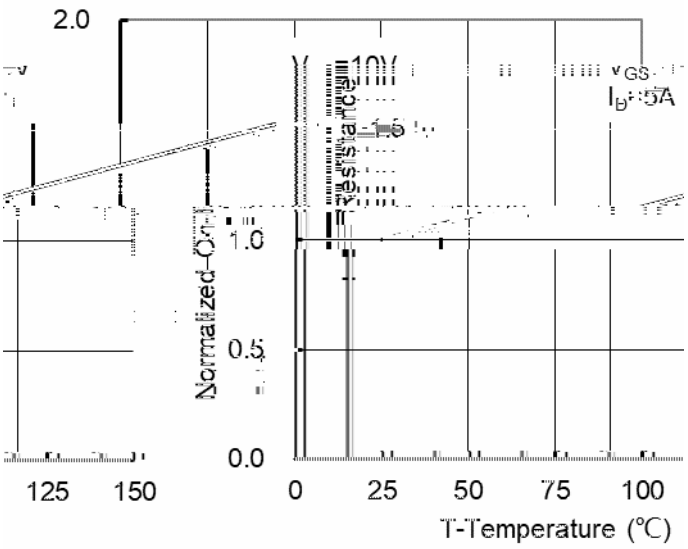
2.0
1.0
0.5
0.0
Normalized
I_D=5A
125
150
0
25
50
75
100
T-Temperature (℃)

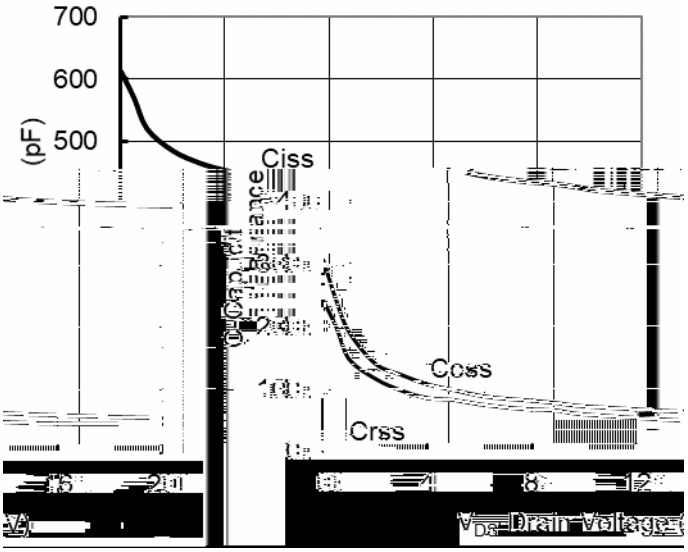
700
600
500
(pF)
Ciss
Coss
Crss
V_{DS}-Drain Voltage

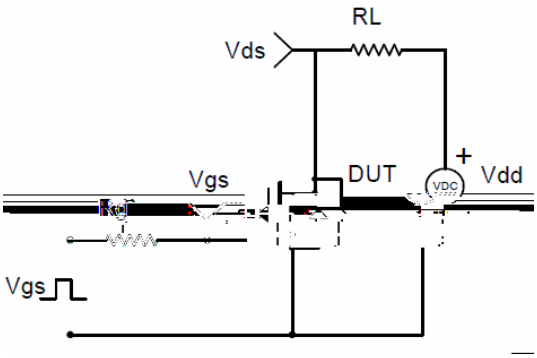
RL
Vds
Vgs
DUT
VDC
Vdd
Vgs

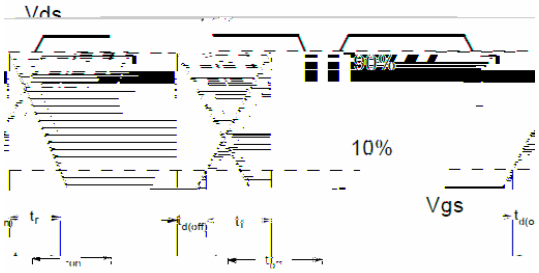
Vds
10%
Vgs

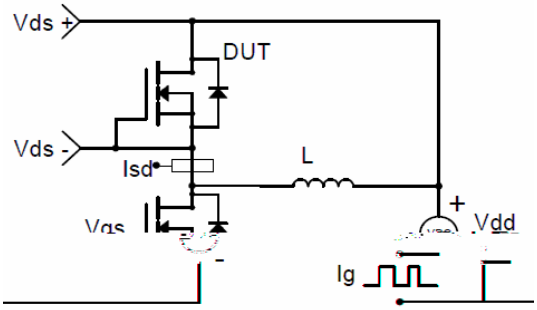
Vds +
DUT
Vds -
Isd
L
Vgs
Vdd
Ig

Isd
Vdd
Vds

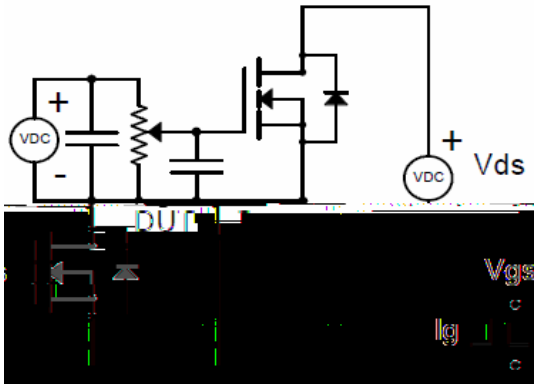
VDC
Vds
DUT
Vgs
Ig

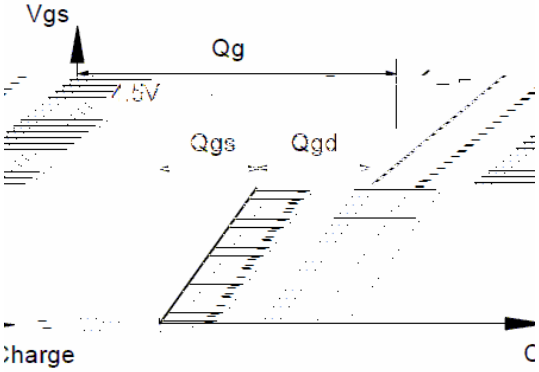
Vgs
Qg
Qgs
Qgd
Charge

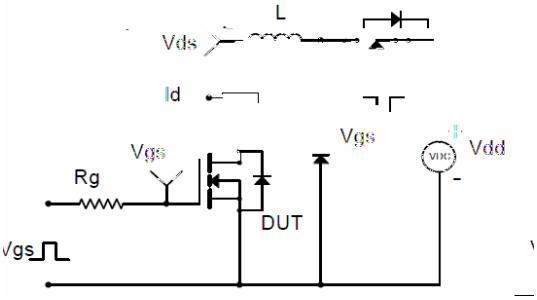
L
Vds
Id
Vgs
Rg
DUT
Vdd
Vgs

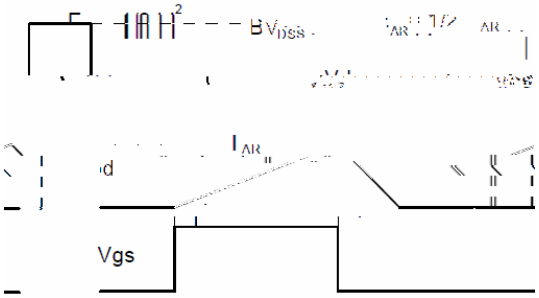
Vgs

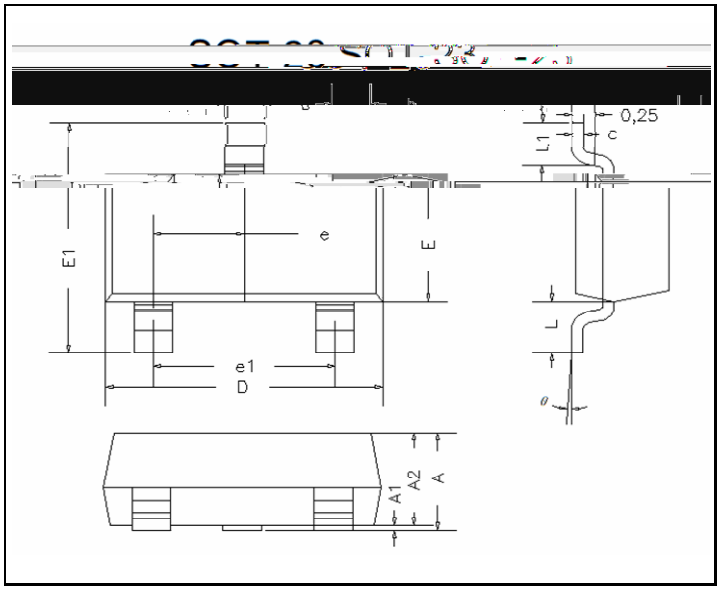
E1
e
E
e1
D
A1
A2
A
L
θ
L1
0,25
c

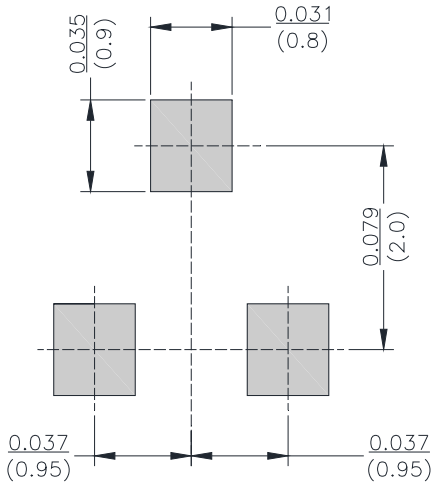
0.035
(0.9)
0.031
(0.8)
0.079
(2.0)
0.037
(0.95)
0.037
(0.95)